Inspection chamber with internal inspection point
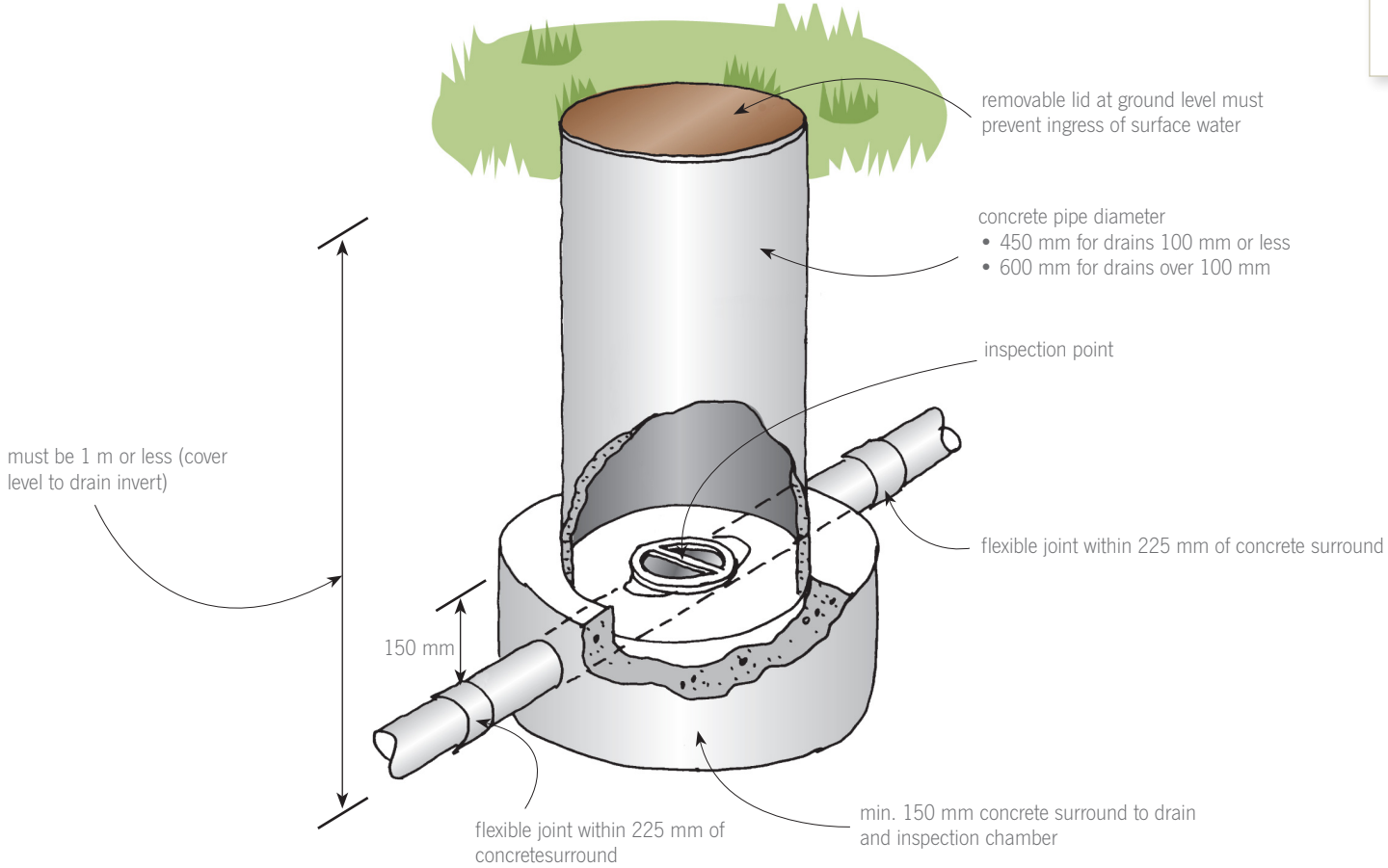
© BRANZ 2009