Basic rules for waste pipes discharging to a gully trap©
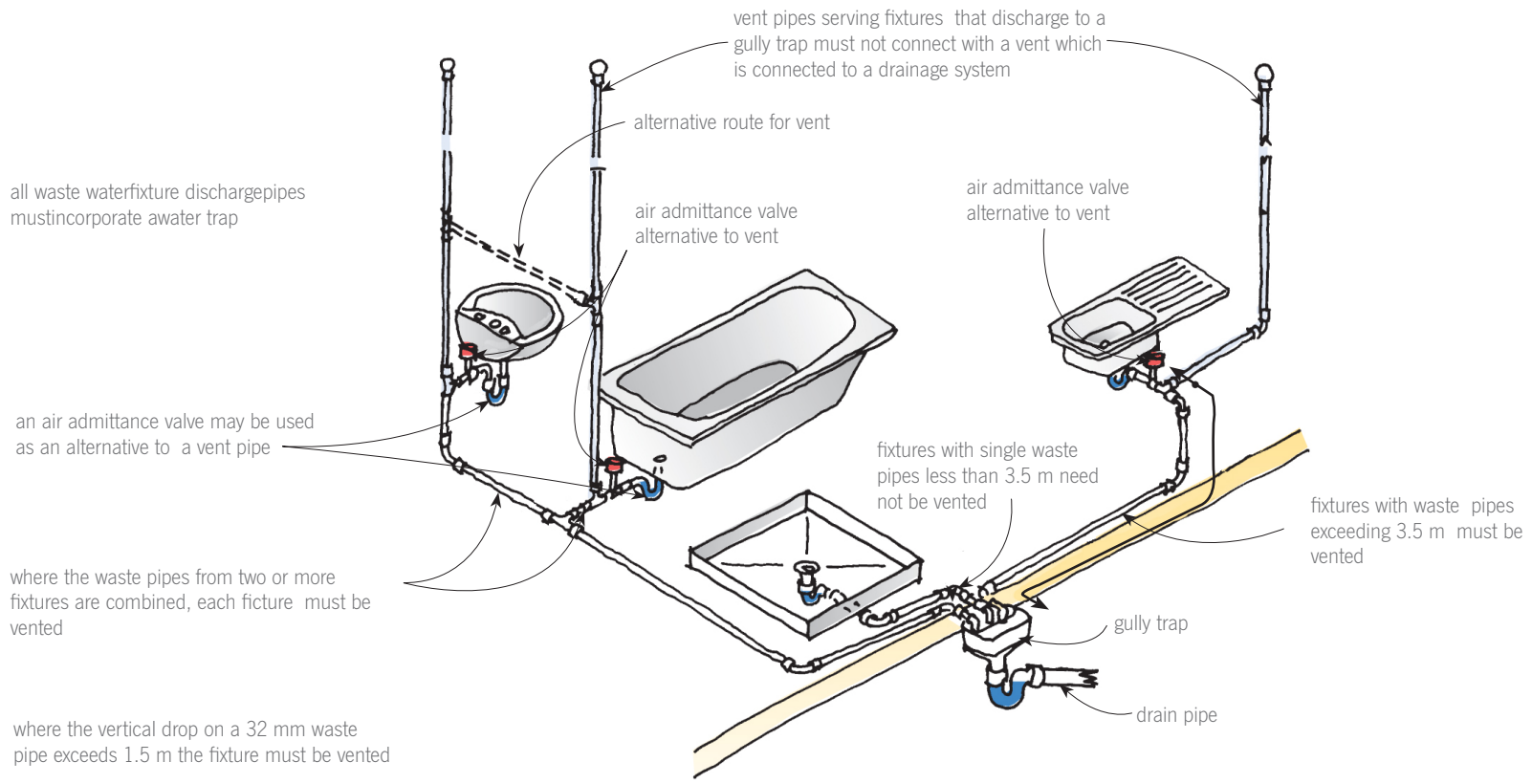
BRANZ 2009